DongGuan City Newway Stationery Co, Ltd

Address:
No. 8, Jingye Middle Road, Liaobu Town,
Dongguan City, GuangDong

Telephone:
+86-0769-8930 0071

Archivalpro®

Protect And Display Supplier

2024
Catalogue

Archivalpro®

Archivalpro is a brand centered around the storage and collection of supplies. Since 2014, it has been fully committed to creating its product line. lt focuses on designing, producing, and selling various star card albums, player card albums, game card storage albums, and coin collecting albums, among others.

The Archivalpro brand advocates: Protect the beauty within you! Starting from the actual needs of users, it is determined to become a good helper for collectors.

Dongguan city Newway Stationery Co, Ltd. is an enterprise that specialies in the design, production, and sales of storage products. lt has a complete and scientific quality management system. Under the corporate spirit of "Quality for survival, innovation for development", Archivalpro brand constantly encourages self-thinking innovation, applies new materials to develop novel, practical environmentally friendly products that meet market demand.Dongguan city Neway Stationery Co, Ltd. possesses a full set of automated production lines, more than 100 skilled employees, and an estimated factory size of 8,000 square meters. Our company has mastery over most of the manufacturing processes, enabling us to effectively control costs, deliver products on time, and ensure quality control.

CONTENTS

01 CARD SLEEVE/CARD HOLDER

Card sleeves--- 3/3.5 inch/other size
Resealable card sleeves---3/3.5 inch/other size
Resealable photo sleeves--- 4X3" /5X3.5" /6X4" / 7X5" /8X6"
Photo sleeves--- 4X3" /5X3.5" /6X4" /7X5" /8X6"
Card holder--- 3X4" /3 inch/4 inch
Super thick card holder--- 3/3.5 inch
For Card holder/card brick package bag--- 3/3.5 inch

02 CARD ALBUM

Morandi Card album/ ID Photo Album---- 4 pocket
Card album ---- 3/3.5 inch
Mini album ---- 3 inch/3.5 inch/4X3" /5X3.5" /6X4"
Card album---- A5 /white
CD album---- white/black
Card album(White) ---- PP/CPP pages
Matte card album---- 3 inch/3.5 inch/4X3" /5X3.5" / 6X4"
Badge Collection Album

03 ALBUM REFILL

3 inch-- 1/2/3/4/5/6/7/8/9/10/12/ 13/15 pockets
3.5 inch --1/2/3/4/6/8/9/12 pockets
4X3" /5X3.5" /6X4" /7X5" /8X6"
other size/Badges binder pages/CD refill

04 ALBUM FOLDER

O shaped binder---3O/4O/6O
D shaped binder---2D/4D

05 BOOK BAND

21cm/26cm

06 STICKY NOTES

Bank/CM/Inch

07 PROTECTOR BOARD

55x85mm 4-pocket
55x85mm 9-pocket

08 DOCUMENT FOLDER

A5/A4

09 BADGE COLLECTION FOLDER

10 RULER

Plastic ruler
PET sticker + ruler

11 RING BINDER SIZE CHART

01 CARD SLEEVE/CARD HOLDER

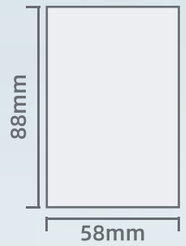

55X85mm Card Sleeve

					UNIT PRICE
S-023	PP	clear	Thickness 0.1mm	**50PCS**	**$0.29**
S-153	CPP	matte	Thickness 0.11mm	**50PCS**	**$0.32**

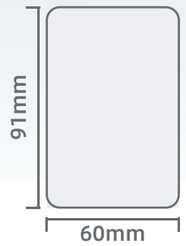

63X88mm Card Sleeve

					UNIT PRICE
S-129	CPP	matte	Thickness 0.1mm	**50PCS**	**$0.62**
S-130	CPP	clear	Thickness 0.1mm	**50PCS**	**$0.62**

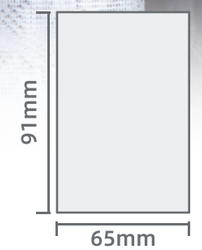

63X88mm Card Sleeve (clear)

				UNIT PRICE
S-075	PP	Thickness 0.1mm	50PCS	$0.33
S-104 (64.5X90mm)	PP	Thickness 0.1mm	50PCS	$0.33
S-191	CPP	Thickness 0.12mm	50PCS	$0.57

Photo/Card Sleeve (clear/PP/Thickness 0.1mm)

				UNIT PRICE
S-268 (A6 post card)	108X150mm	30PCS	$0.71
S-307 (ID photo)	40X50mm	50PCS	$0.24
S-019 (Japanese Album)	57X93mm	30PCS	$0.29
S-131	68X102mm	50PCS	$0.44
S-216	96X115mm	50PCS	$0.62
S-257	72X112mm	20PCS	$0.41
S-230	87X121mm	50PCS	$0.71
S-236	58X98mm	30PCS	$0.32
S-279	91X110mm	20PCS	$0.24
S-300	56X127mm	35PCS	$0.38
S-308	52X52mm	30PCS	$0.24
S-353	53X154mm	40PCS	$0.44

55X85mm Card Sleeves (PP/Thickness 0.1+0.14mm)

			UNIT PRICE
S-072	white	50PCS	$0.35
S-073	black	50PCS	$0.35
S-074	pink	50PCS	$0.35
S-132	semi-transparent	50PCS	$0.35
S-164	red	50PCS	$0.79
S-165	yellow	50PCS	$0.79
S-166	green	50PCS	$0.79
S-167	blue	50PCS	$0.79
S-168	purple	50PCS	$0.79

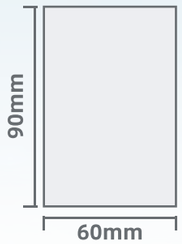

63X88mm Layer Card Sleeve (PP)

				UNIT PRICE
S-111	light pink	Thickness 0.1+0.14mm	50PCS	$0.35
S-112	light purple	Thickness 0.1+0.14mm	50PCS	$0.35
S-113	light blue	Thickness 0.1+0.14mm	50PCS	$0.35

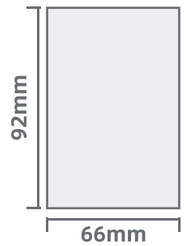

63X88mm Card Sleeves (PP)

				UNIT PRICE
S-058	white	Thickness 0.1+0.14mm	50PCS	$0.35
S-059	black	Thickness 0.1+0.14mm	50PCS	$0.35
S-060	red	Thickness 0.1+0.14mm	50PCS	$0.35
S-061	yellow	Thickness 0.1+0.14mm	50PCS	$0.35
S-062	green	Thickness 0.1+0.14mm	50PCS	$0.35
S-063	blue	Thickness 0.1+0.14mm	50PCS	$0.35
S-064	purple	Thickness 0.1+0.14mm	50PCS	$0.35
S-065	semi-transparent	Thickness 0.1+0.14mm	50PCS	$0.35

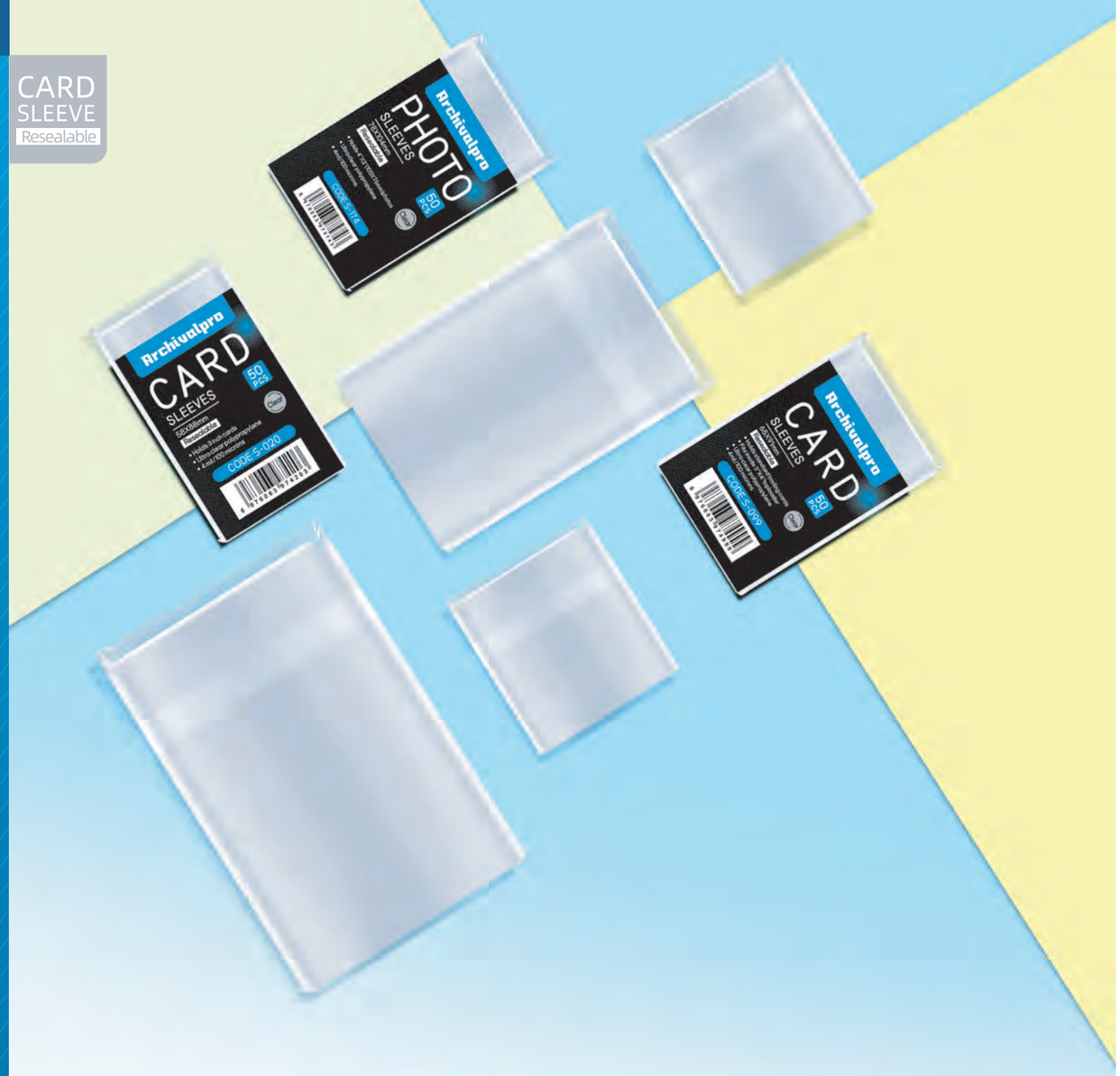

Card Sleeve (PP/clear/Thickness 0.1mm)

			UNIT PRICE
S-042	65X180mm	**25PCS**	**$0.39**
S-043	75X210mm	**25PCS**	**$0.50**
S-044	85X210mm	**25PCS**	**$0.57**
S-217	96X115mm	**50PCS**	**$0.76**
S-315	56X127mm	**35PCS**	**$0.29**

CARD
SLEEVE
Resealable

S-020 55X85mm Card Sleeve

PP clear
Thickness 0.1mm 50PCS/PACK
UNIT PRICE: $0.34

S-022 55X85mm Card Sleeve

PP clear
Thickness 0.1mm 50PCS/PACK
UNIT PRICE: $0.35

S-154 55X85mm Card Sleeve

PP matte
Thickness 0.11mm 50PCS/PACK
UNIT PRICE: $0.40

S-099 55X85mm Card Sleeve

PP clear
Thickness 0.1mm 50PCS/PACK
UNIT PRICE: $0.44

Badge/Card Sleeve (PP/clear/Thickness 0.1mm)

			UNIT PRICE
S-033	55X55mm	50PCS	$0.29
S-034	62x62mm	50PCS	$0.35
S-035	65x65mm	50PCS	$0.36
S-036	70x70mm	50PCS	$0.41
S-037	80x80mm	50PCS	$0.52
S-038	48x75mm	50PCS	$0.30
S-039	55x80mm	50PCS	$0.36
S-040	93X93mm	50PCS	$0.63
S-041	105x105mm	50PCS	$0.82

CARD
SLEEVE
Resealable

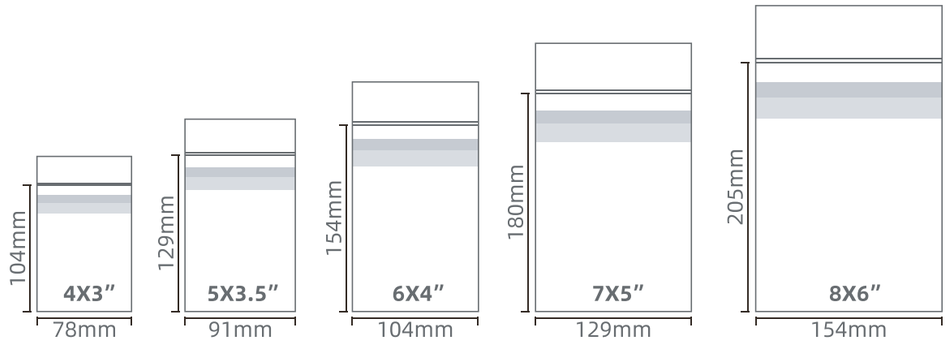

Photo Sleeve (PP/clear/Thickness 0.1mm)

			UNIT PRICE
S-174	4X3"/78x104mm	50PCS	$0.60
S-175	5X3.5"/91x129mm	50PCS	$0.76
S-176	6X4"/104X154mm	50PCS	$1.08
S-177	7X5"/129x180mm	25PCS	$0.60
S-178	8X6"/154X205mm	25PCS	$0.92

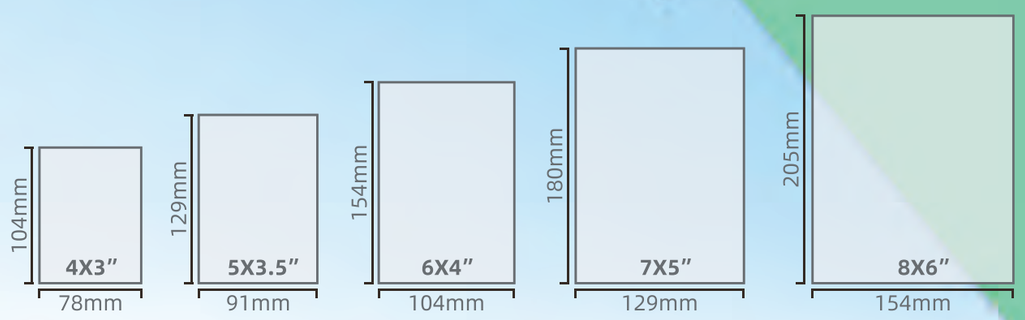

Photo Sleeve (PP/clear/Thickness 0.1mm)

			UNIT PRICE
S-079	4X3"/78x104mm	50PCS	$0.56
S-134	5X3.5"/91x129mm	50PCS	$0.60
S-080	6X4"/104X154mm	50PCS	$1.03
S-135	7X5"/129x180mm	25PCS	$0.56
S-136	8X6"/154X205mm	25PCS	$0.77

Top Loader (Plastic/clear)

				UNIT PRICE
S-021	77X103mm	Thickness 35PT	25PCS	$1.24
S-159	77X103mm	Thickness 35PT	10PCS	$0.60
S-204	77X103mm	Thickness 35PT	10PCS	$0.60
S-091	68X98mm	Thickness 35PT	25PCS	$1.24
S-189	68X98mm	Thickness 35PT	10PCS	$0.60
S-206	68X98mm	Thickness 35PT	10PCS	$0.60
S-110	89X125mm	Thickness 0.25mm	10PCS	$0.37
S-057	89X125mm	Thickness 0.25mm	50PCS	$1.40
S-186	66X136mm	Thickness 0.25mm	10PCS	$0.76
NW-003	77X103mm	Thickness 35PT	20PCS	$0.71
NW-005	68X98mm	Thickness 35PT	20PCS	$0.71
NW-010	66X136mm	Thickness 0.25mm	10PCS	$0.60

Side Loader (Plastic/clear)

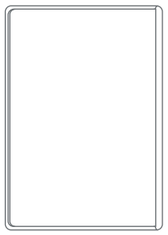

				UNIT PRICE
S-055	77X103mm	Thickness 35PT	**25PCS**	**$1.24**
S-160	77X103mm	Thickness 35PT	**10PCS**	**$0.60**
S-205	77X103mm	Thickness 35PT	**10PCS**	**$0.60**
S-190	68X98mm	Thickness 35PT	**10PCS**	**$0.60**
S-207	68X98mm	Thickness 35PT	**10PCS**	**$0.60**
S-092	68X98mm	Thickness 35PT	**25PCS**	**$1.24**
NW-004	77X103mm	Thickness 35PT	**20PCS**	**$0.71**
NW-009	66X136mm	Thickness 0.25mm	**10PCS**	**$0.60**

Super thick card holder (PS/Thickness 35PT)

					UNIT PRICE
S-108	inner diameter: 59x89mm	Magnetic	clear	1PCS	**$0.48**
S-109	inner diameter: 59x89mm	Magnetic	clear	3PCS	**$1.43**
S-276	inner diameter: 66X92mm	Magnetic	clear	1PCS	**$0.48**
S-277	inner diameter: 66X92mm	Magnetic	clear	3PCS	**$1.43**
NW-006	inner diameter: 66X92mm		clear	12PCS	**$1.24**
NW-007	inner diameter: 66X92mm		clear	5PCS	**$0.48**
NW-011	inner diameter: 66X92mm		clear	24PCS	**$2.48**
NW-012	inner diameter: 66X92mm		clear	50PCS	**$3.97**
NW-013	inner diameter: 66X92mm		clear	100PCS	**$7.90**
NW-016	inner diameter: 66X92mm	Plastic film covering	clear	1PCS	**$0.37**
NW-017	inner diameter: 66X92mm	Plastic film covering	clear	3PCS	**$1.08**

For Card holder/card brick package bag (Thickness 0.07mm)

					UNIT PRICE
S-105	for **55X85mm** card holder/72X100+30mm	PP	clear	50PCS	**$0.39**
S-106	for **63X85mm** card holder/80X103+30mm	PP	clear	50PCS	**$0.42**
S-107	for **63X85mm** magnetic card holder/82X115+30mm	PP	clear	50PCS	**$0.46**
S-116	for **63X85mm** card holder/77X99+30mm	PP	clear	50PCS	**$0.41**

02 CARD ALBUM

Morandi Card Album (55X85mm /4-pockets)

					UNIT PRICE
S-179	30	+	PP	25pages	$2.67
S-180	30	+	PP	25pages	$2.67
S-181	30	+	PP	25pages	$2.67
S-182	30	+	PP	25pages	$2.67
S-183	30	+	PP	25pages	$2.67

ID Photo Album

					UNIT PRICE
S-305	4 pockets	125X120mm	khaki	**PP/25 pages**	**$1.19**

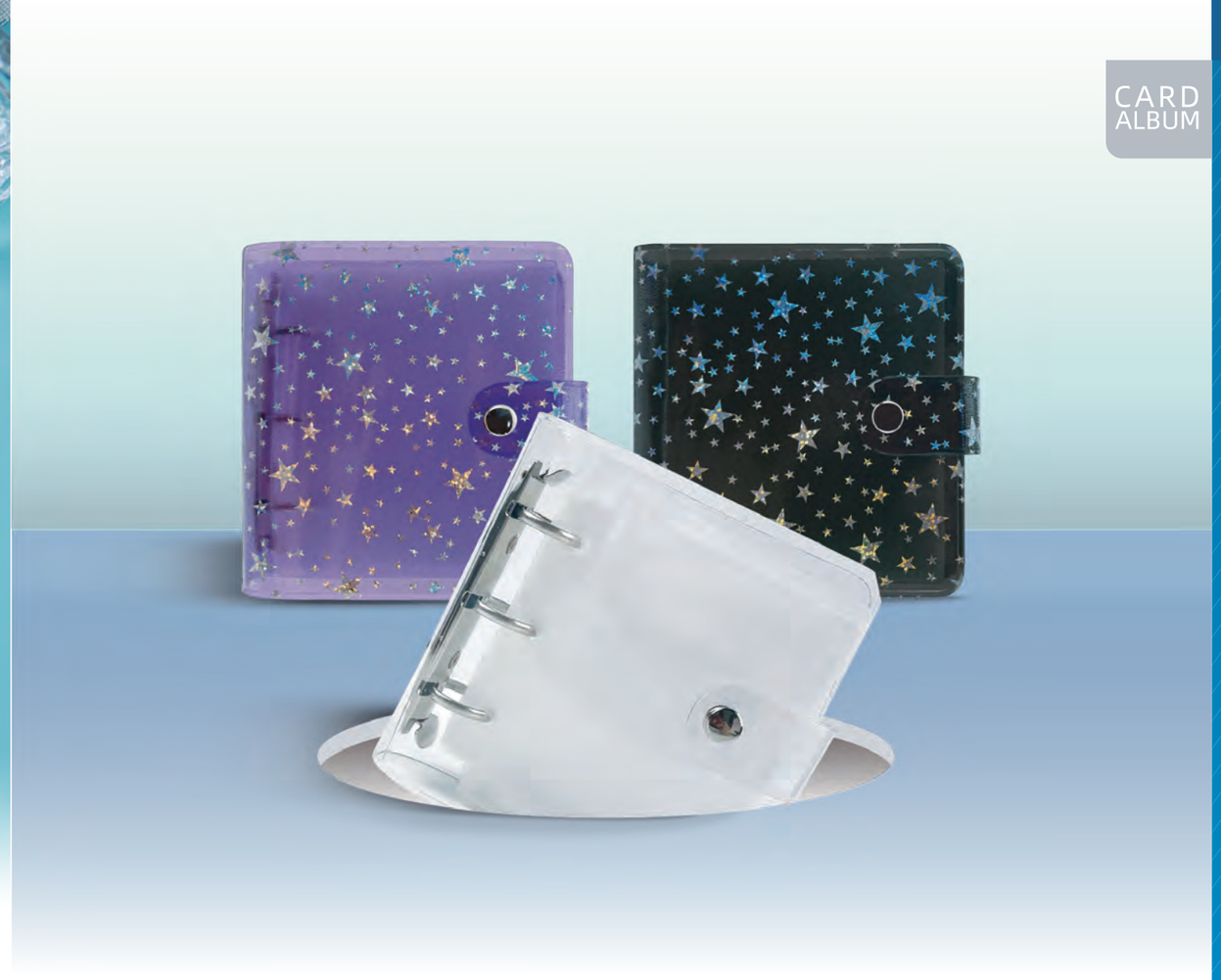

63X88mm/1 Pocket/Ring Binder Album

				UNIT PRICE
S-076	PVC	transparent	**CPP/25 pages**	**$0.92**
S-078	PVC	transparent	**PP/25 pages**	**$0.92**

55X85mm/1 Pocket/Ring Binder Album

				UNIT PRICE
S-234	PVC	transparent	**CPP/25 pages**	**$0.95**
S-235	PVC	transparent	**PP/25 pages**	**$0.95**

Card Album

				UNIT PRICE
S-117	63X88mm/1-pocket	khaki	CPP/25 pages	$1.19
S-118	63X88mm/1-pocket	khaki	PP/25 pages	$1.03
S-119	63X88mm/2-pocket	khaki	PP/20 pages	$1.03
S-120	5X3.5" /1-pocket	khaki	PP/20 pages	$1.03
S-121	4X3" /2-pocket	khaki	PP/20 pages	$1.19
S-122	6X4" /1-pocket	khaki	PP/20 pages	$1.19
S-184	55X85mm/2-pocket	khaki	PP/20 pages	$1.03
S-232	55X85mm/1-pocket	khaki	CPP/25 pages	$0.95
S-233	55X85mm/1-pocket	khaki	PP/25 pages	$0.95
S-240	4X3" /1-pocket	khaki	PP/25 pages	$1.19
S-223	77X115mm/2-pocket	khaki	PP/20 pages	$1.19

A5 Card Album (55X85mm/4-pocket)

				UNIT PRICE
S-141	khaki	PP	20 pages	$1.35
S-142	blue	PP	20 pages	$1.35
S-143	purple	PP	20 pages	$1.35
S-144	green	PP	20 pages	$1.35
S-145	khaki	PP	30 pages	$1.56
S-146	blue	PP	30 pages	$1.56
S-147	purple	PP	30 pages	$1.56
S-148	green	PP	30 pages	$1.56

A5 Card Folder · White (6X4" /2-pocket)

			UNIT PRICE
S-169	PP	20 pages	$1.00
S-170	PP	30 pages	$1.02
S-171	PP	40 pages	$1.03

Card Album With Protector Board

			UNIT PRICE
S-094	A5/55X85mm/4-pocket	50 pages	$2.35
S-096	A5/55X85mm/4-pocket	50 pages	$2.08
S-066	A5/63X88mm/4-pocket	50 pages	$2.16
S-070	A5/63X88mm/4-pocket	50 pages	$2.48
S-093	A4/55X85mm/9-pocket	50 pages	$4.92
S-095	A4/55X85mm/9-pocket	50 pages	$3.89
S-056	A4/63X88mm/9-pocket	50 pages	$5.08
S-069	A4/63X88mm/9-pocket	50 pages	$4.05

Card Album

					UNIT PRICE
S-348	55X85mm/3-pocket	133/2D/30	white	30 pages	$1.40
S-289	55X85mm/5-pocket	210/3D/25	white	30 pages	$2.51
S-243	55X85mm/6-pocket	210/3D/25	white	30 pages	$2.51
S-325	55X85mm/7-pocket	210/3D/25	white	30 pages	$2.86
S-327	55X85mm/8-pocket	210/3D/25	white	30 pages	$2.86
S-298	55X85mm/12-pocket	292/4D/30	white	30 pages	$3.81
S-329	55X85mm/13-pocket	292/4D/30	white	40 pages	$4.73
S-349	63X88mm/3-pocket	210/3D/25	white	30 pages	$1.56
S-288	63X88mm/5-pocket	210/3D/25	white	30 pages	$2.51
S-242	63X88mm/6-pocket	210/3D/30	white	30 pages	$2.51
S-270	63X88mm/12-pocket	292/4D/30	white	30 pages	$4.10
S-278	63X88mm/12-pocket	292/4D/30	black	30 pages	$4.10

*Please refer to ring binder size chart.

CD Album

					UNIT PRICE
S-311	20	PU	black	10 Pages	$1.48
S-312	20	PU	white	10 Pages	$1.48

Ring Binder Album (63X88mm)

				UNIT PRICE
S-244	9-pocket	white	20 pages	$3.97
S-245	9-pocket	white	30 pages	$5.06
S-246	4-pocket	white	20 pages	$2.14
S-247	4-pocket	white	30 pages	$2.68

A4+ Album

				UNIT PRICE
S-356	55X85mm/15-pocket	white	30 pages	$4.73
S-357	6X4" 4-pocket	white	20 pages	$2.98
S-358	8X6" 2-pocket	white	20 pages	$2.98

Card Album (55X85mm)

					UNIT PRICE
S-291	10-pocket	292/40/25	white	30 pages	$3.89

*Please refer to ring binder size chart.

Postcard Card Album (PU)

				UNIT PRICE
S-139	6X4" 1-pocket	pink + black	PP/15 pages	$1.87
S-140	6X4" 1-pocket	white + black	PP/15 pages	$1.87
S-354	56X156mm/2-pocket	pink + black	PP/15 pages	$1.87
S-361	56X156mm/2-pocket	white + black	PP/15 pages	$1.87

Card Album

			UNIT PRICE
S-342	55X85mm/2-pocket	PP/25 pages	$1.17

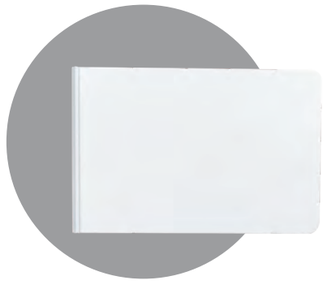

Card Album (59X130mm)

				UNIT PRICE
S-149	3-pocket	khaki	PP/25 pages	$1.56
S-150	3-pocket	dream blue	PP/25 pages	$1.56
S-151	3-pocket	light purple	PP/25 pages	$1.56
S-152	3-pocket	green	PP/25 pages	$1.56
S-318	6-pocket	white	PP/30 pages	$2.75
S-320	2-pocket	pink	PP/20 pages	$1.87
S-321	2-pocket	blue	PP/20 pages	$1.87
S-323	2-pocket	white	PP/20 pages	$1.87
S-324	2-pocket	purple	PP/20 pages	$1.87

PU Card Album (PU)

				UNIT PRICE
S-336	63X88mm/1-pocket	white + black	PP/25 pages	$1.43
S-339	55X85mm/1-pocket	purple	PP/25 pages	$1.43
S-340	55X85mm/1-pocket	blue	PP/25 pages	$1.43
S-341	55X85mm/1-pocket	yellow	PP/25 pages	$1.43

Badge Collection Album (PP/PET)

				UNIT PRICE
S-362	A5+/58mm/6-pocket	white	3PCS	$2.35
S-363	A5+/75mm/4-pocket	white	3PCS	$2.35
S-364	A4/58mm/12-pocket	white	4PCS	$4.48
S-365	A4/75mm/6-pocket	white	4PCS	$4.05

03 ALBUM REFILL

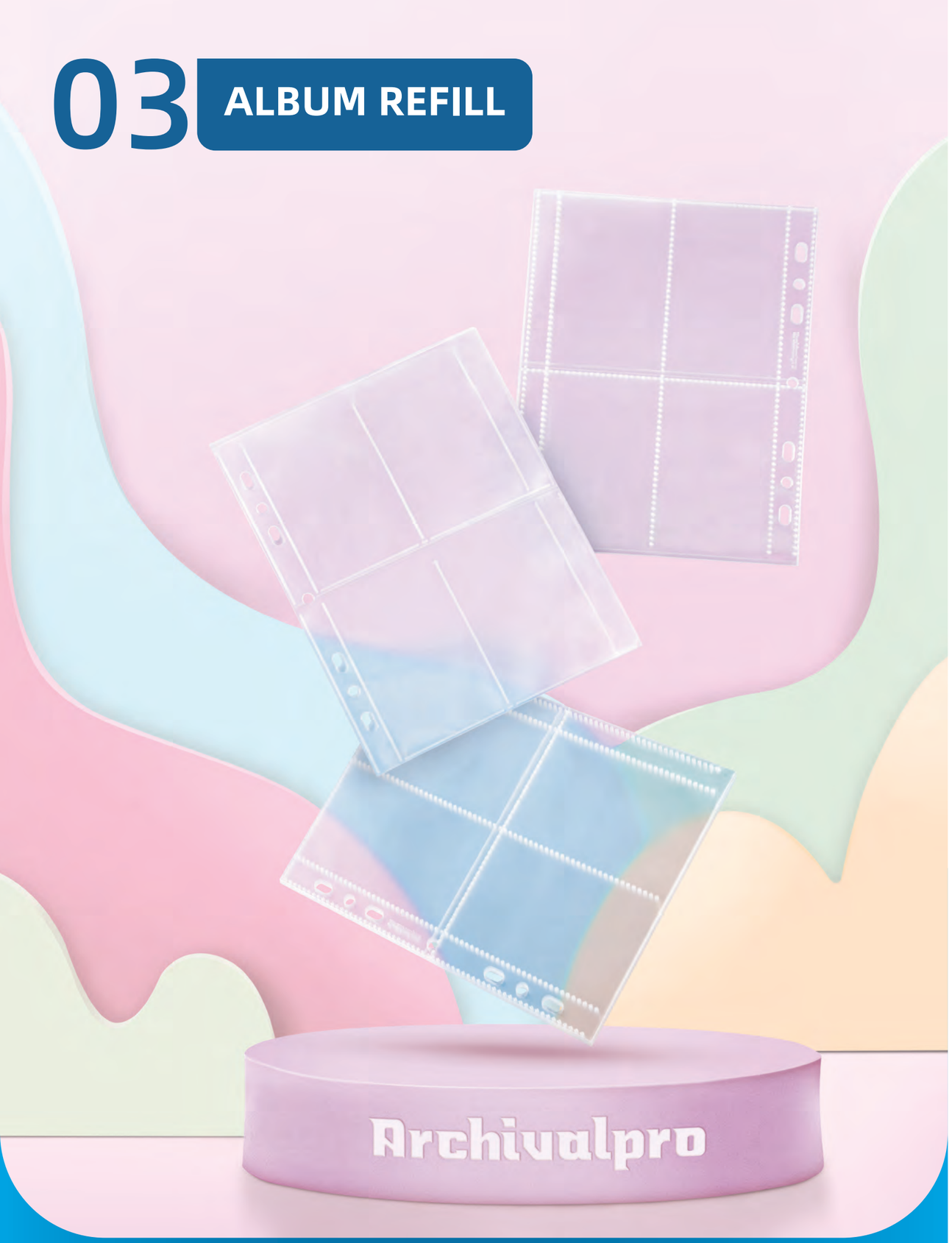

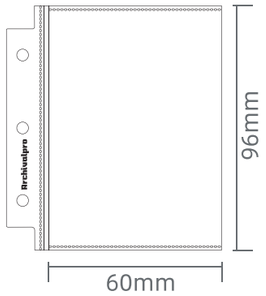

S-218 clear

55X85mm/1- pocket
Thickness 0.1mm
25 PCS/PACK **PP**
UNIT PRICE $0.29

S-219 matte

55X85mm/1- pocket
Thickness 0.1mm
25 PCS/PACK **CPP**
UNIT PRICE $0.29

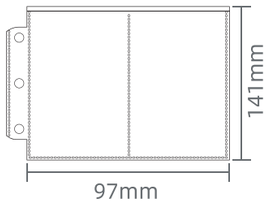

S-343 clear

55X85mm/2- pocket
Thickness 0.1mm
25 PCS/PACK **PP**
UNIT PRICE $0.35

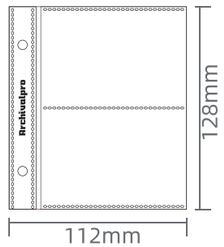

S-185 clear

55X85mm/2- pocket
Thickness 0.1mm
20 PCS/PACK **PP**
UNIT PRICE $0.29

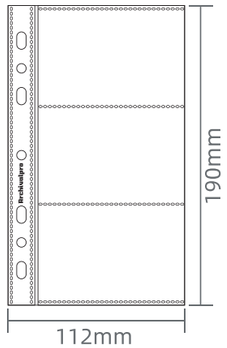

S-350 clear

55X85mm/3- pocket
Thickness 0.1mm
25 PCS/PACK **PP**
UNIT PRICE $0.38

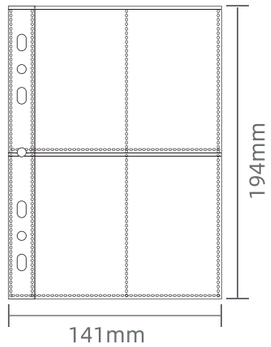

S-001 clear

55X85mm/4- pocket
Thickness 0.1mm
10 PCS/PACK **PP**
UNIT PRICE $0.26

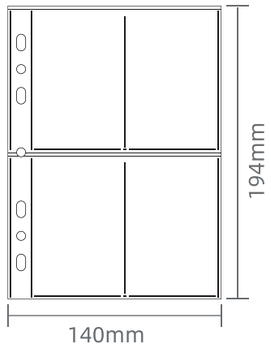

S-003 clear

55X85mm/4- pocket
Thickness 0.1mm
10 PCS/PACK **CPP**
UNIT PRICE $0.44

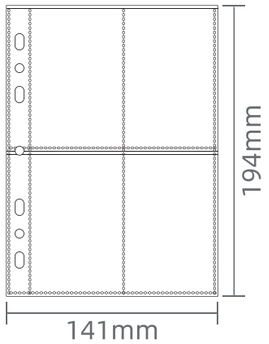

S-138 clear

55X85mm/4- pocket
Thickness 0.1mm
25 PCS/PACK **PP**
UNIT PRICE $0.60

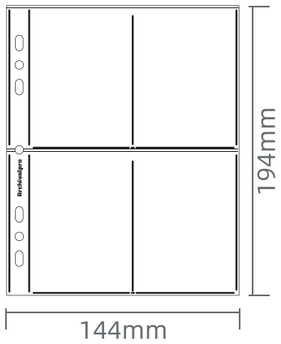

S-192 matte

55X85mm/4- pocket
Thickness 0.11mm
10 PCS/PACK **CPP**
UNIT PRICE $0.29

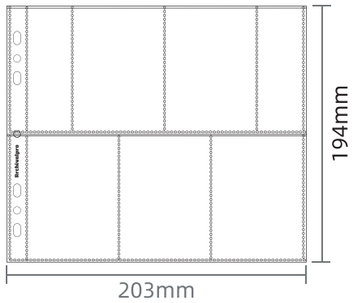

S-290 clear

55X85mm/5- pocket
Thickness 0.1mm
10 PCS/PACK **PP**
UNIT PRICE $0.35

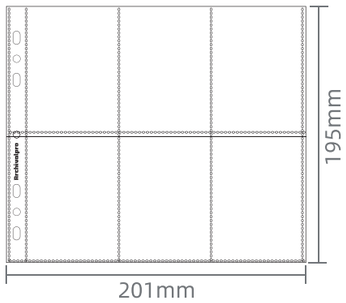

S-125 clear

55X85mm/6- pocket
Thickness 0.11mm
10 PCS/PACK **PP**
UNIT PRICE $0.33

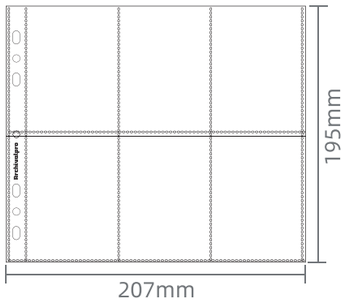

S-126 clear

55X85mm/6- pocket
Thickness 0.1mm
10 PCS/PACK **PP**
UNIT PRICE $0.36

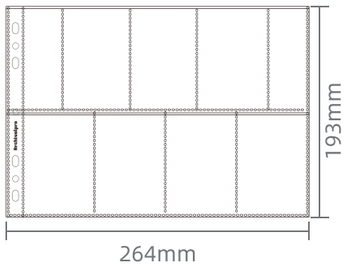

S-326 clear

55X85mm/7- pocket
Thickness 0.1mm
10 PCS/PACK **PP**
UNIT PRICE $0.40

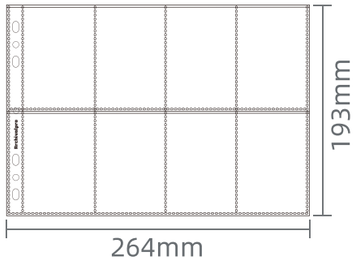

S-328 clear

55X85mm/8- pocket
Thickness 0.1mm
10 PCS/PACK **PP**
UNIT PRICE $0.40

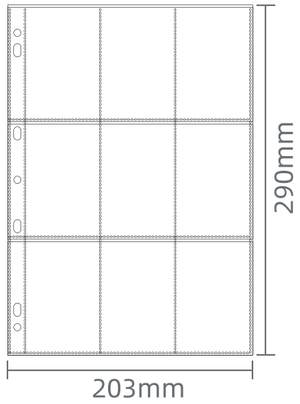

S-002 clear

55X85mm/9- pocket
Thickness 0.1mm
10 PCS/PACK **PP**
UNIT PRICE $0.48

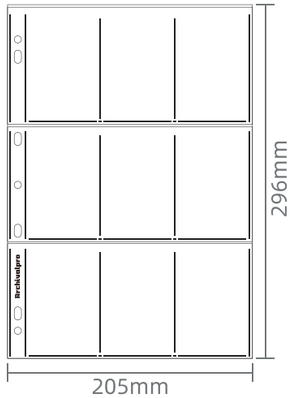

S-004 clear

55X85mm/9- pocket
Thickness 0.11mm
10 PCS/PACK **CPP**
UNIT PRICE $0.67

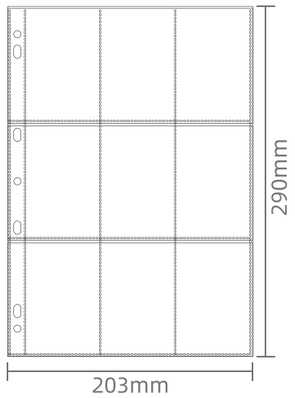

S-137 clear

55X85mm/9- pocket
Thickness 0.1mm
25 PCS/PACK **PP**
UNIT PRICE $1.08

ALBUM REFILL

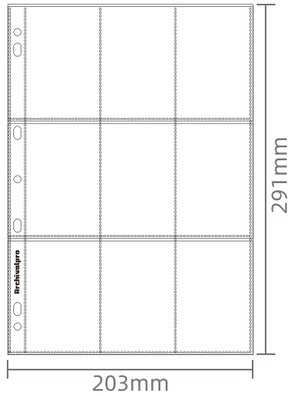

S-224 matte

55X85mm/9- pocket
Thickness 0.11mm
10 PCS/PACK **CPP**
UNIT PRICE $0.50

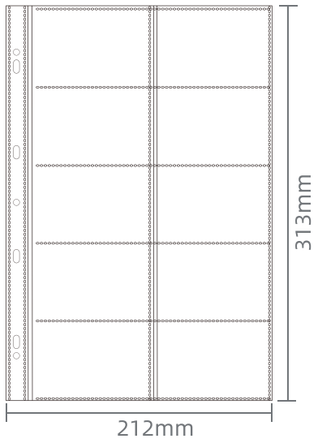

S-293 clear

55X85mm/10- pocket
Thickness 0.1mm
10 PCS/PACK **PP**
UNIT PRICE $0.52

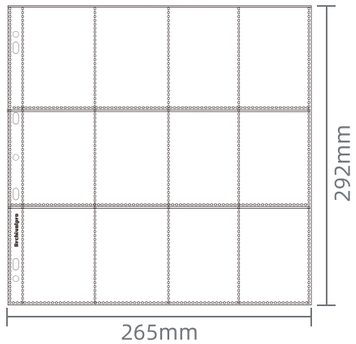

S-299 clear

55X85mm/12- pocket
Thickness 0.1mm
10 PCS/PACK **PP**
UNIT PRICE $0.52

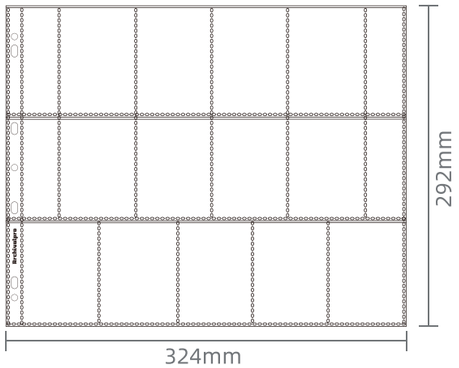

S-330 clear

55X85mm/13- pocket
Thickness 0.1mm
10 PCS/PACK **PP**
UNIT PRICE $0.65

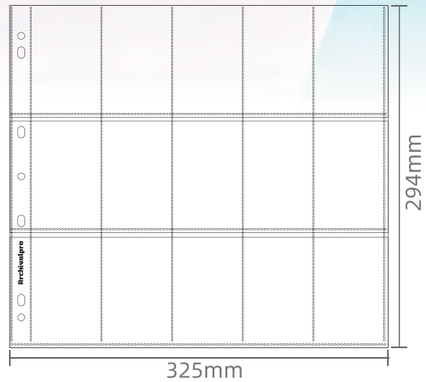

S-355 clear

55X85mm/15- pocket
Thickness 0.1mm
10 PCS/PACK **PP**
UNIT PRICE $0.65

ALBUM REFILL

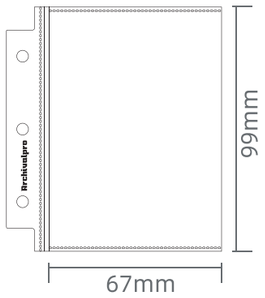

S-090 clear

63X88mm/1- pocket
Thickness 0.1mm
25 PCS/PACK **PP**
UNIT PRICE $0.29

S-198 matte

63X88mm/1- pocket
Thickness 0.11mm
25 PCS/PACK **CPP**
UNIT PRICE $0.29

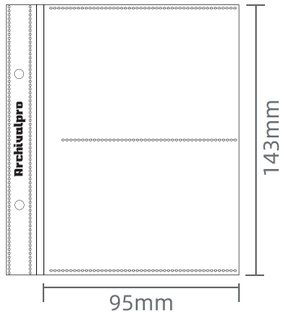

S-226 clear

63X88mm/2- pocket
Thickness 0.11mm
20 PCS/PACK **PP**
UNIT PRICE $0.33

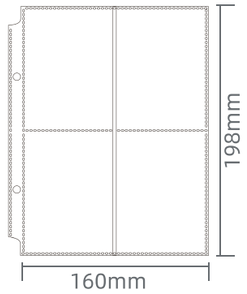

S-194 white

63X88mm/4- pocket
Thickness 0.11mm
10 PCS/PACK **PP**
UNIT PRICE $0.46

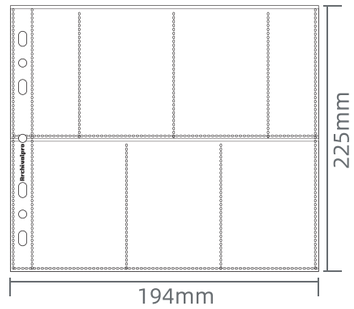

S-123 clear

63X88mm/5- pocket
Thickness 0.1mm
10 PCS/PACK **PP**
UNIT PRICE $0.38

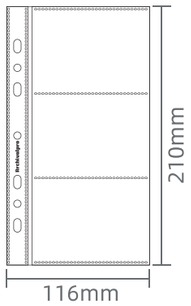

S-351 clear

63X88mm/3- pocket
Thickness 0.1mm
20 PCS/PACK **PP**
UNIT PRICE $0.48

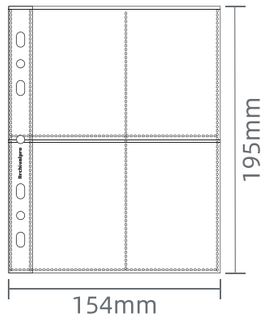

S-005 clear

63X88mm/4- pocket
Thickness 0.1mm
10 PCS/PACK **PP**
UNIT PRICE $0.31

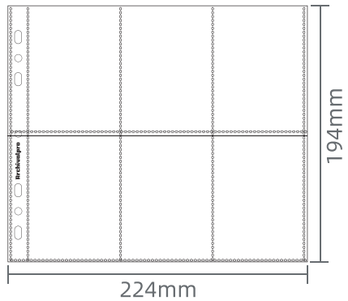

S-127 clear

63X88mm/6- pocket
Thickness 0.1mm
10 PCS/PACK **PP**
UNIT PRICE $0.41

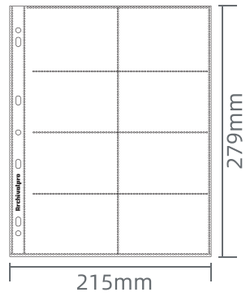

S-098 clear

63X88mm/8- pocket
Thickness 0.1mm
10 PCS/PACK **PP**
UNIT PRICE $0.52

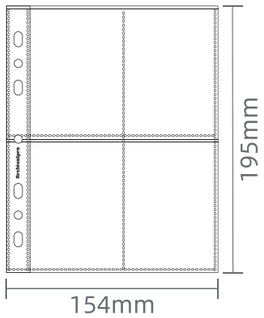

S-007 clear

63X88mm/4- pocket
Thickness 0.11mm
10 PCS/PACK **CPP**
UNIT PRICE $0.47

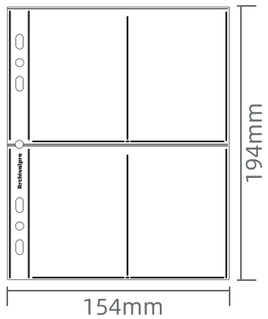

S-193 matte

63X88mm/4- pocket
Thickness 0.11mm
10 PCS/PACK **CPP**
UNIT PRICE $0.30

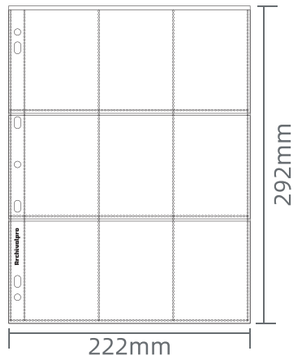

S-006 clear

63X88mm/9- pocket
Thickness 0.1mm
10 PCS/PACK **PP**
UNIT PRICE $0.55

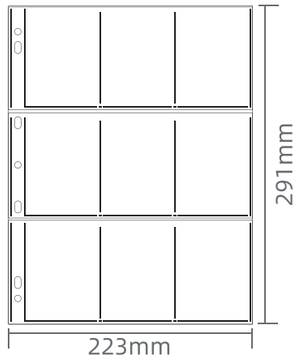

S-008 clear

63X88mm/9- pocket
Thickness 0.1mm
10 PCS/PACK **CPP**
UNIT PRICE $0.71

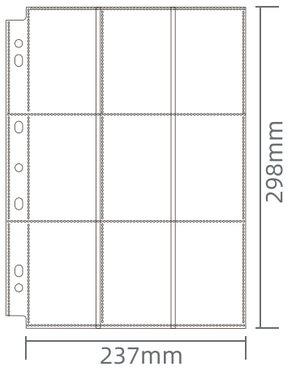

S-195 white

63X88mm/9- pocket
Thickness 0.11mm
10 PCS/PACK **PP**
UNIT PRICE $0.92

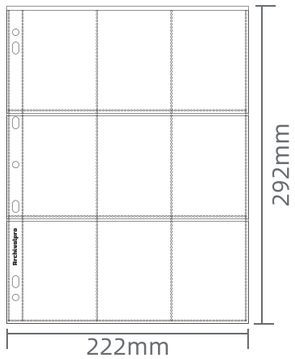

S-225 matte

63X88mm/9- pocket
Thickness 0.11mm
10 PCS/PACK **CPP**
UNIT PRICE $0.53

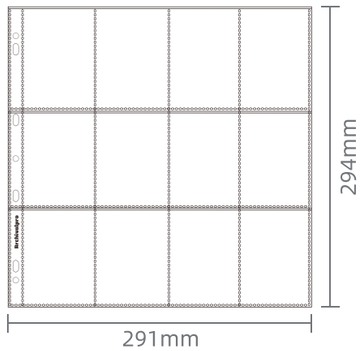

S-124 clear

63X88mm/12- pocket
Thickness 0.1mm
10 PCS/PACK **PP**
UNIT PRICE $0.60

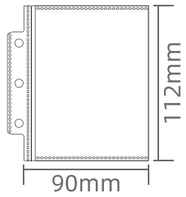

S-220 clear

4X3" 1- pocket
Thickness 0.1mm
25 PCS/PACK **PP**
UNIT PRICE $0.38

S-221 matte

4X3" 1- pocket
Thickness 0.11mm
25PCS/PACK **CPP**
UNIT PRICE $0.38

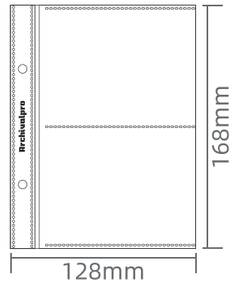

S-228 clear

4X3" 2- pocket
Thickness 0.11mm
20 PCS/PACK **PP**
UNIT PRICE $0.40

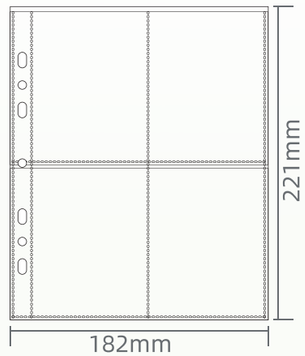

S-011 clear

4X3" 4- pocket
Thickness 0.1mm
10PCS/PACK **PP**
UNIT PRICE $0.32

S-161 clear

4X3" 4- pocket
Thickness 0.1mm
25 PCS/PACK **PP**
UNIT PRICE $0.73

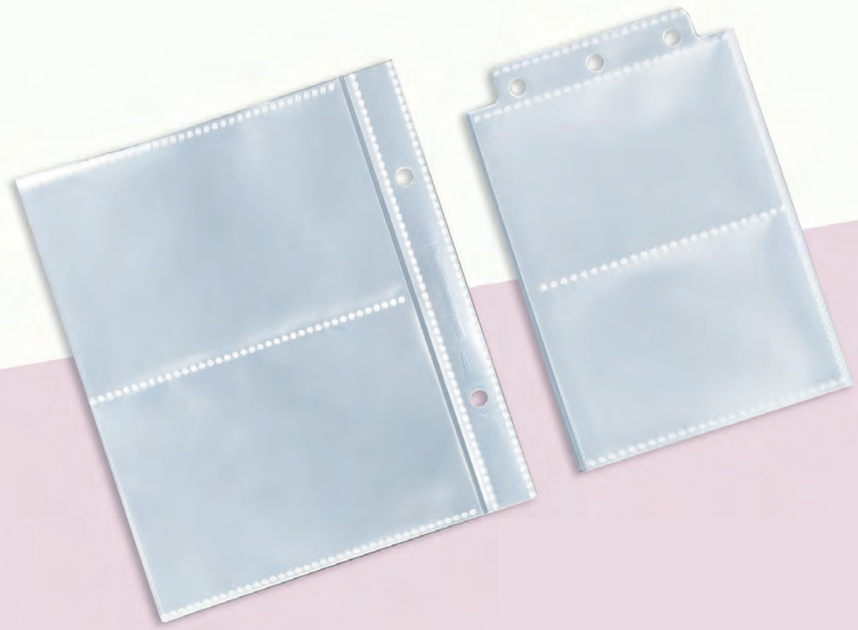

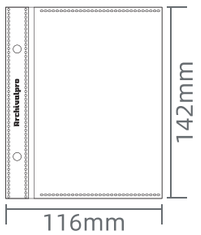

S-227 clear

5X3.5" 1- pocket
Thickness 0.11mm
20 PCS/PACK **PP**
UNIT PRICE $0.33

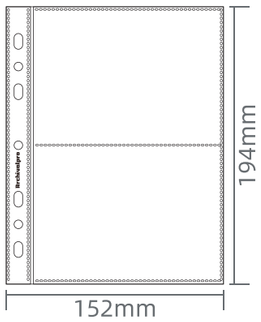

S-009 clear

5X3.5" 2- pocket
Thickness 0.11mm
10 PCS/PACK **PP**
UNIT PRICE $0.29

S-172 clear

5X3.5" 2- pocket
Thickness 0.11mm
25 PCS/PACK **PP**
UNIT PRICE $0.60

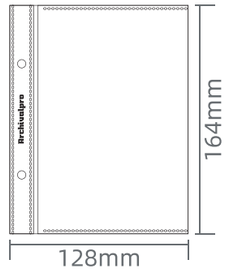

S-229 clear

6X4" 1- pocket
Thickness 0.11mm
20 PCS/PACK **PP**
UNIT PRICE $0.40

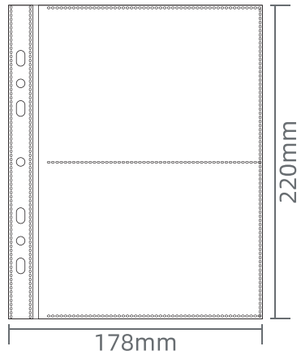

S-012 clear

6X4" 2- pocket
Thickness 0.1mm
10 PCS/PACK **PP**
UNIT PRICE $0.33

S-162 clear

6X4" 2- pocket
Thickness 0.1mm
25 PCS/PACK **PP**
UNIT PRICE $0.73

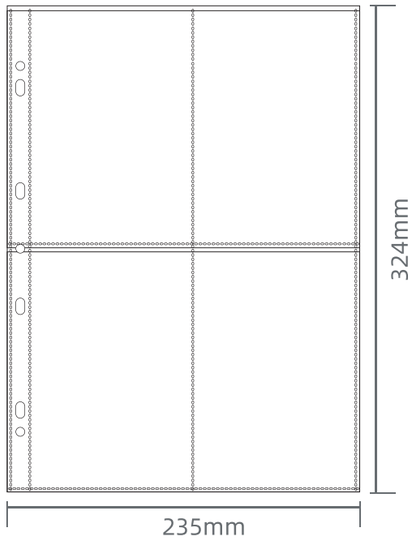

S-359 clear

6X4" 4- pocket
Thickness 0.1mm
10 PCS/PACK **PP**
UNIT PRICE $0.46

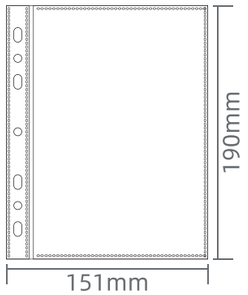

S-010 clear

7X5" 1- pocket
Thickness 0.1mm
10 PCS/PACK **PP**
UNIT PRICE $0.29

S-173 clear

7X5" 1- pocket
Thickness 0.1mm
25 PCS/PACK **PP**
UNIT PRICE $0.60

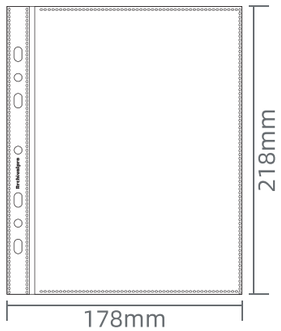

S-163 clear

8X6" 1- pocket
Thickness 0.1mm
25 PCS/PACK **PP**
UNIT PRICE $0.73

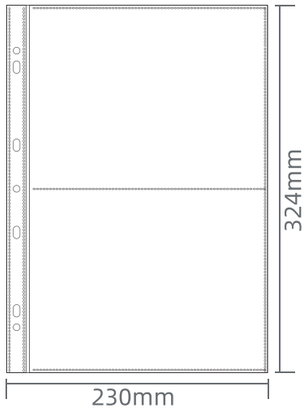

S-360 clear

8X6" 2- pocket
Thickness 0.1mm
10 PCS/PACK **PP**
UNIT PRICE $0.46

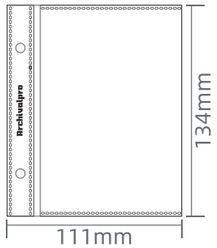

S-304 clear

89X128mm/1- pocket
Thickness 0.1mm
20 PCS/PACK **PP**
UNIT PRICE $0.40

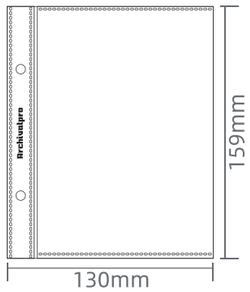

S-303 clear

112X153mm/1- pocket
Thickness 0.1mm
20 PCS/PACK **PP**
UNIT PRICE $0.44

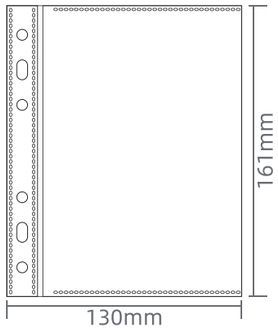

S-231 clear

110X156mm/1- pocket
Thickness 0.1mm
20 PCS/PACK **PP**
UNIT PRICE $0.40

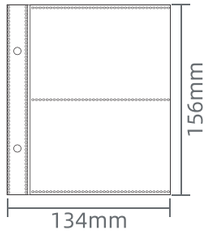

S-222 clear

75X115mm/2- pocket
Thickness 0.1mm
20 PCS/PACK **PP**
UNIT PRICE $0.40

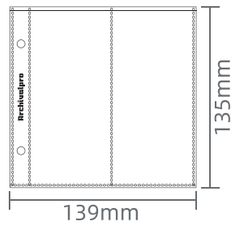

S-317 clear

59X130mm/2- pocket
Thickness 0.1mm
20 PCS/PACK **PP**
UNIT PRICE $0.40

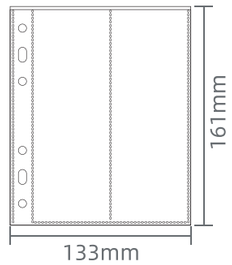

S-352 clear

56X155mm/2- pocket
Thickness 0.1mm
20 PCS/PACK **PP**
UNIT PRICE $0.41

ALBUM REFILL

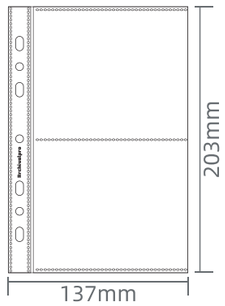

S-238 clear

98X117mm/2- pocket
Thickness 0.1mm
10 PCS/PACK **PP**
UNIT PRICE $0.41

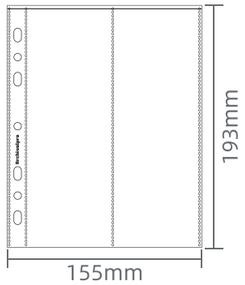

S-103 clear

67X189mm/2- pocket
Thickness 0.1mm
10 PCS/PACK **PP**
UNIT PRICE $0.36

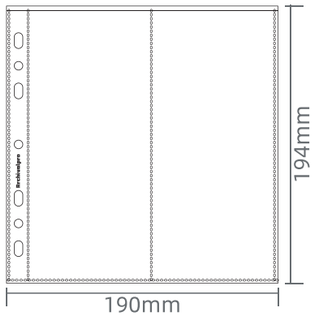

S-128 clear

85X189mm/2- pocket
Thickness 0.1mm
10 PCS/PACK **PP**
UNIT PRICE $0.37

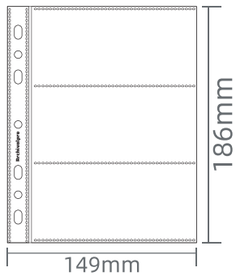

S-302 clear

59X130mm/3- pocket
Thickness 0.1mm
10 PCS/PACK **PP**
UNIT PRICE $0.25

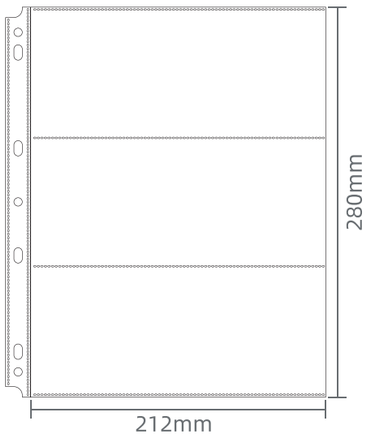

S-088 clear

90X213mm/3- pocket
Thickness 0.1mm
10 PCS/PACK **PP**
UNIT PRICE $0.46

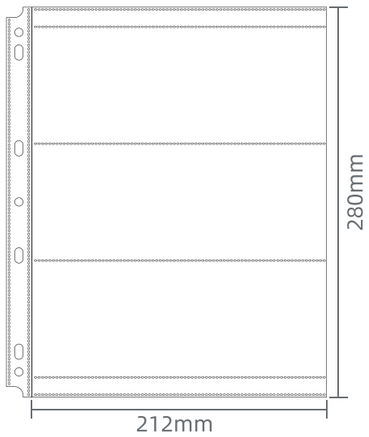

S-089 clear

80X213mm/3- pocket
Thickness 0.1mm
10 PCS/PACK **PP**
UNIT PRICE $0.46

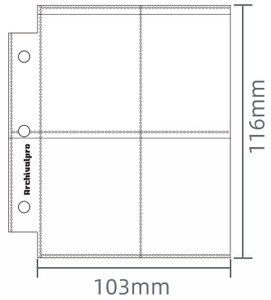

S-306 clear

42X52mm/4- pocket
Thickness 0.1mm
25 PCS/PACK **PP**
UNIT PRICE $0.40

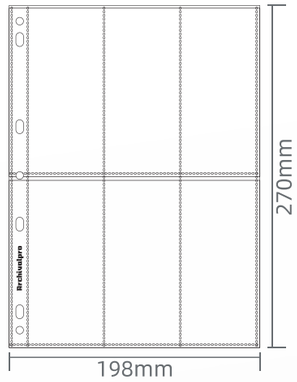

S-316 clear

59X130mm/6- pocket
Thickness 0.1mm
10 PCS/PACK **PP**
UNIT PRICE $0.46

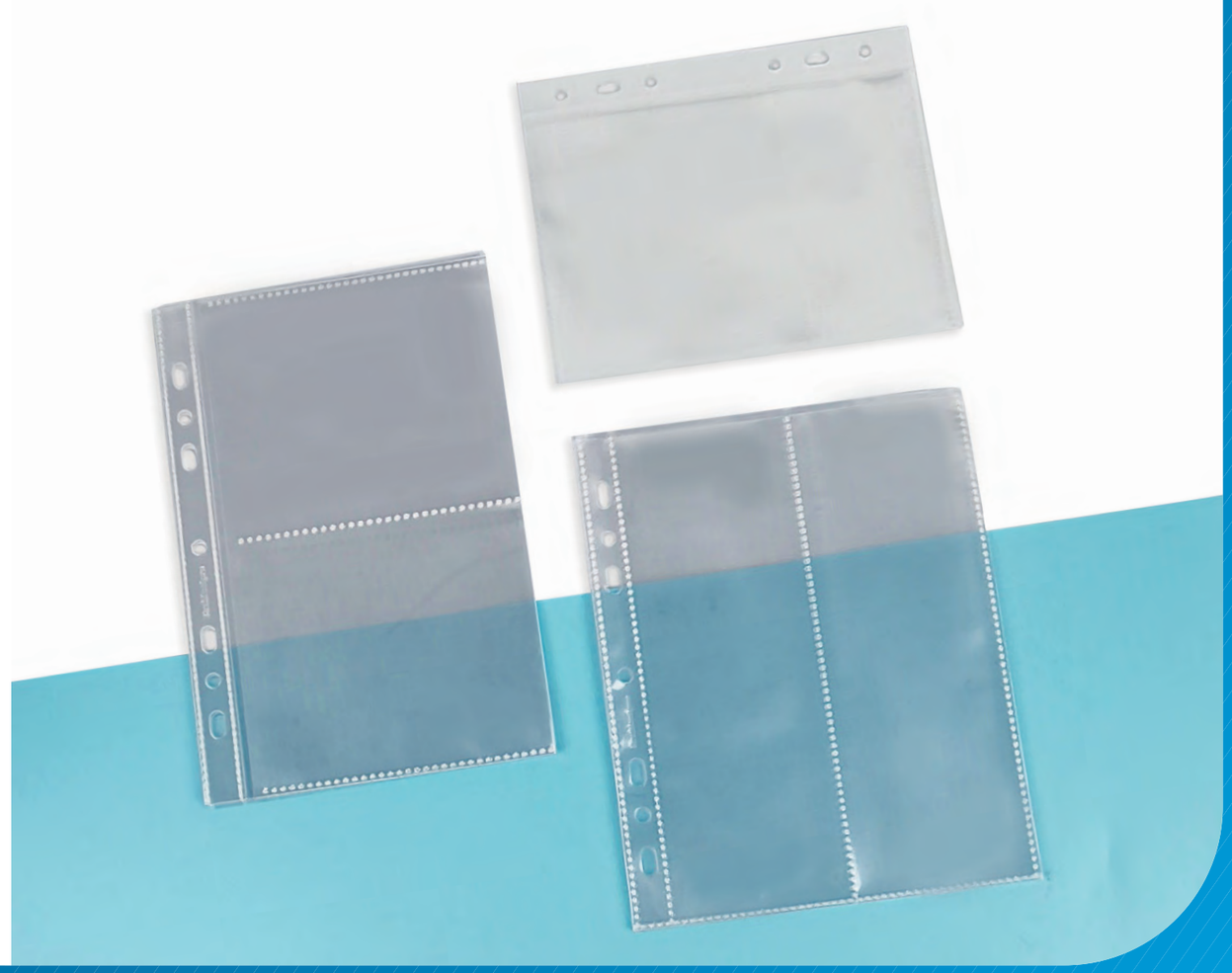

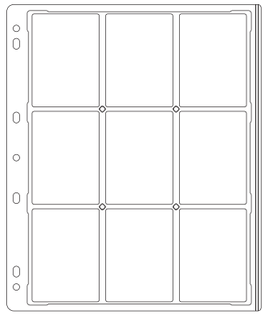

S-366 clear

Rectangle PET
86X62mm/9- pocket
2 PCS/PACK
UNIT PRICE $0.95

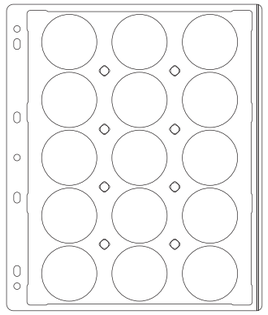

S-367 clear

Round PET
51mm/15- pocket
2 PCS/PACK
UNIT PRICE $0.95

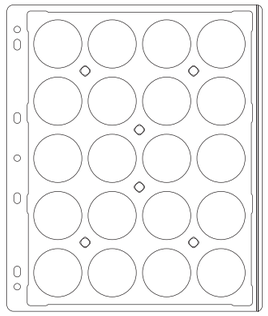

S-368 clear

Round PET
44.5mm/20- pocket
2 PCS/PACK
UNIT PRICE $0.95

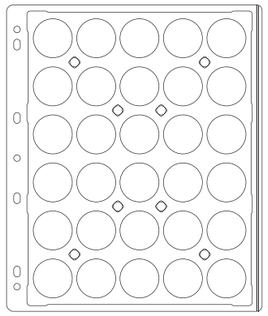

S-369 clear

Round PET
36mm/30- pocket
2 PCS/PACK
UNIT PRICE $0.95

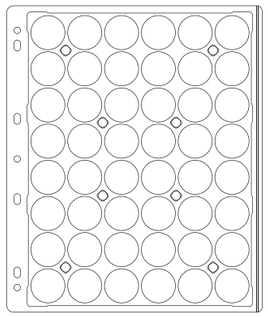

S-370 clear

Round PET
31.5mm/48- pocket
2 PCS/PACK
UNIT PRICE $0.95

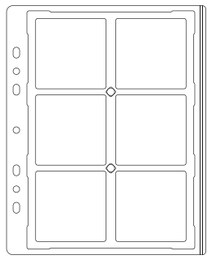

S-371 clear

Square PET
65X65mm/6- pocket
2 PCS/PACK
UNIT PRICE $0.76

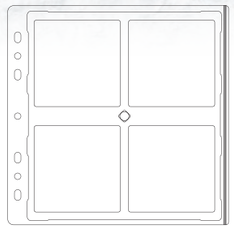

S-372 clear

Square PET
80X80mm/4- pocket
2 PCS/PACK
UNIT PRICE $0.76

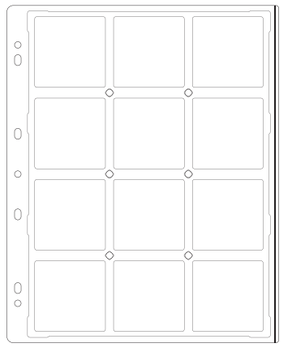

S-373 clear

Square PET
65X65mm/12- pocket
2 PCS/PACK
UNIT PRICE $1.14

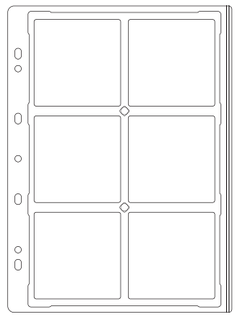

S-374 clear

Square PET
80X80mm/6- pocket
2 PCS/PACK
UNIT PRICE $0.92

ALBUM REFILL

CD Album Refill

S-313	20	black	10 pages	$0.37
S-314	20	white	10 pages	$0.37

05 ALBUM FOLDER

CARD ALBUM Structure diagram:

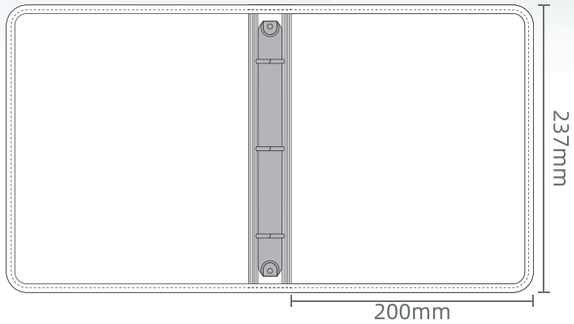

A5+ Album Folder

(PP foam、Applies to 4X3" 4-pocket, 6X4" 2-pocket, 5X3.5" 1-pocket)

				UNIT PRICE
S-024	210/30/20	light blue	hold 20 pages	$1.00
S-025	210/30/20	light green	hold 20 pages	$1.00
S-026	210/30/20	light pink	hold 20 pages	$1.00
S-027	210/30/25	light blue	hold 30 pages	$1.02
S-028	210/30/25	light green	hold 30 pages	$1.02
S-029	210/30/25	light pink	hold 30 pages	$1.02
S-030	210/30/30	light blue	hold 40 pages	$1.03
S-031	210/30/30	light green	hold 40 pages	$1.03
S-032	210/30/30	light pink	hold 40 pages	$1.03

*Please refer to ring binder size chart.

CARD ALBUM
Structure diagram:

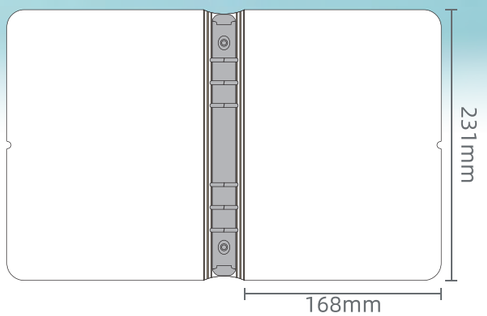

A5 Album Folder

(PP foam、Applies to 55X88mm 4-pocket or 63X88mm 4-pocket)

				UNIT PRICE
S-045	216/60/20	khaki	hold 20 pages	$0.94
S-046	216/60/20	dream blue	hold 20 pages	$0.94
S-047	216/60/20	light purple	hold 20 pages	$0.94
S-048	216/60/20	green	hold 20 pages	$0.94
S-049	216/60/25	khaki	hold 30 pages	$0.97
S-050	216/60/25	dream blue	hold 30 pages	$0.97
S-051	216/60/25	light purple	hold 30 pages	$0.97
S-052	216/60/25	green	hold 30 pages	$0.97

*Please refer to ring binder size chart.

Album Folder

(PP White cover)

			UNIT PRICE
S-081	133/2D/25	hold 30 pages	$0.95
S-082	133/2D/30	hold 40 pages	$1.03
S-053	133/2D/38	hold 50 pages	$1.08
S-054	292/4D/38	hold 50 pages	$1.87
S-083	292/4D/25	hold 30 pages	$1.75
S-084	292/4D/30	hold 40 pages	$1.84

*Please refer to ring binder size chart.

CARD ALBUM
Structure diagram:

2D

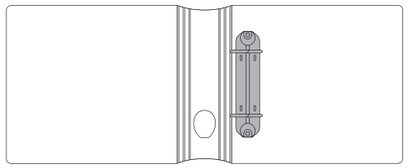

4D

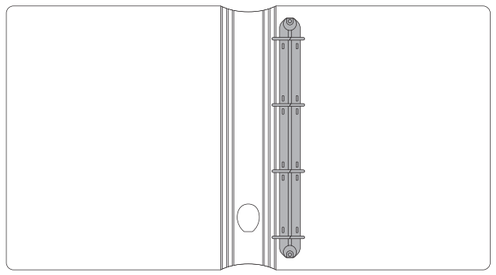

Album Folder (PP White cover)

			UNIT PRICE
S-169	210/30/20	hold 20 pages	$1.00
S-170	210/30/25	hold 20 pages	$1.02
S-171	210/30/30	hold 20 pages	$1.03

*Please refer to ring binder size chart.

CARD ALBUM
Structure diagram:

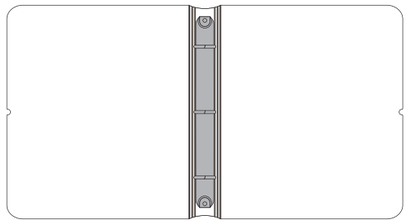

Album Folder (PP White cover)

			UNIT PRICE
S-241	210/3D/25/5~6- pocket	hold 30 pages	$1.40
S-201	292/4O/25/9- pocket	hold 30 pages	$1.90
S-202	292/4O/30/9- pocket	hold 40 pages	$2.06
S-203	292/4O/38/9- pocket	hold 50 pages	$2.22

*Please refer to ring binder size chart.

CARD ALBUM
Structure diagram:

3D

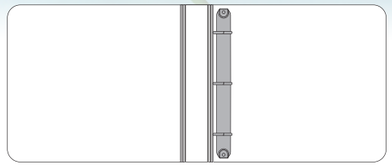

4O

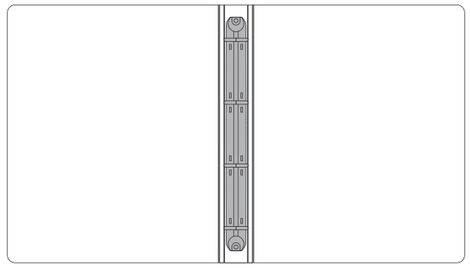

06 BOOK BAND

S-506 red yellow black

21CM Book Band silicone material

UNIT PRICE: $0.79

S-507 pink purple blue

21CM Book Band silicone material

UNIT PRICE: $0.79

S-511 red yellow black

26CM Book Band silicone material

UNIT PRICE: $1.08

S-512 pink purple blue

26CM Book Band silicone material

UNIT PRICE: $1.08

07 STICKY NOTES

S-508 STICKY NOTES

blank multicolour

UNIT PRICE: $0.24

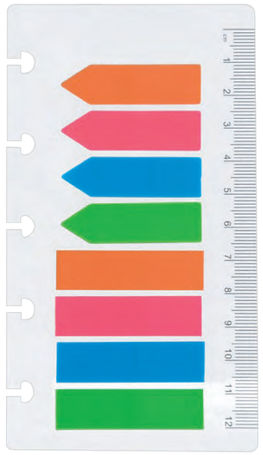

S-509 STICKY NOTES

CM multicolour

UNIT PRICE: $0.32

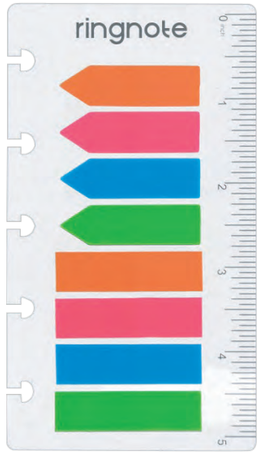

S-510 STICKY NOTES

inch multicolour

UNIT PRICE: $0.32

08 DOCUMENT FOLDER

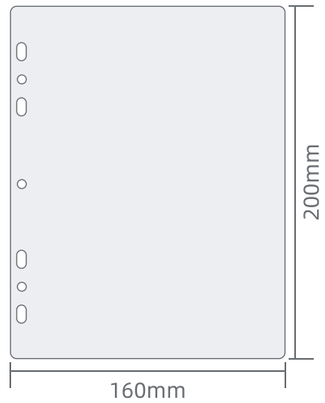

S-100 Document Folder

160X200mm PP
2PCS frosted
UNIT PRICE: $0.32

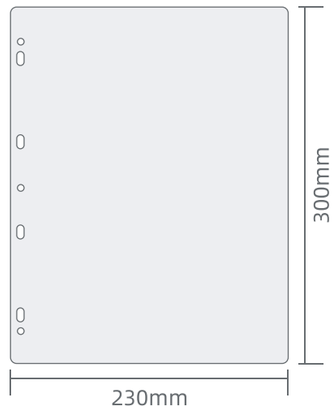

S-101 Document Folder

230X300mm PP
2PCS frosted
UNIT PRICE: $0.44

09 DOCUMENT FOLDER

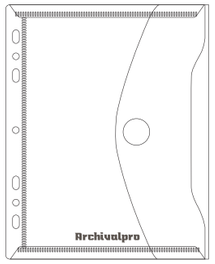

S-102 A5 binder folder

154x194mm PP/7 holes
3PCS/bag

UNIT PRICE: $0.56

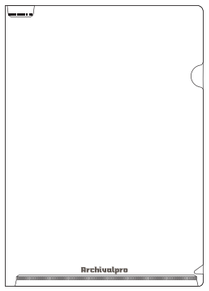

S-133 A4 document folder

235x305mm PP/0.075mm
100PCS/bag

UNIT PRICE: $0.44

10 BADGE COLLECTION BOX

Badge Collection box

					UNIT PRICE
NW-001	clear	suit for 75X75mm	75X75X16mm	3PCS	$0.37
NW-002	clear	suit for 85X85mm	85X85X18mm	3PCS	$0.41

11 RULER

ring bind 7 holes

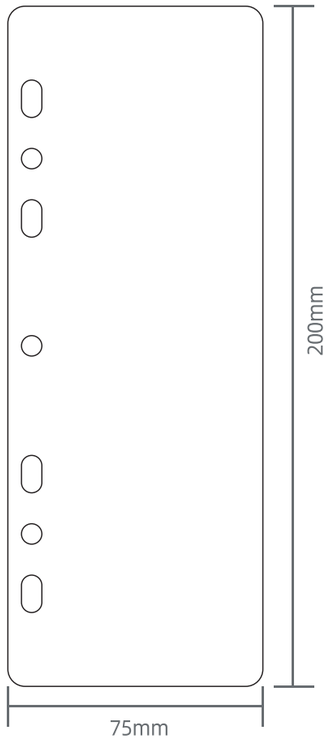

disc bind 8 holes

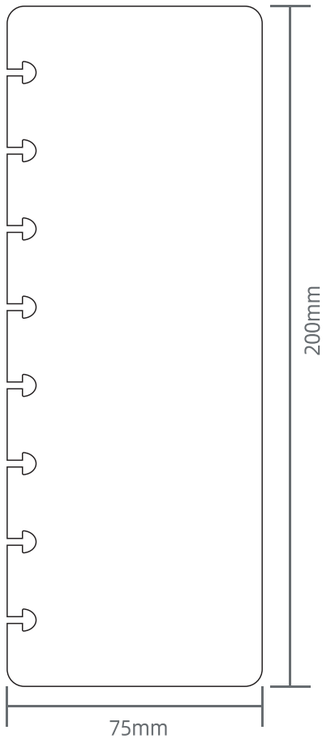

Ruler (Plastic ruler)

				UNIT PRICE
S-515		18cm	disc bind 8 holes	**$0.13**
S-516		18cm	ring bind 7 holes	**$0.13**
S-517		18cm	disc bind 8 holes	**$0.13**
S-518	**PET sticker**	18cm	ring bind 7 holes	**$0.57**
S-519	**PET sticker**	18cm	disc bind 8 holes	**$0.57**

12 RING BINDER SIZE CHART

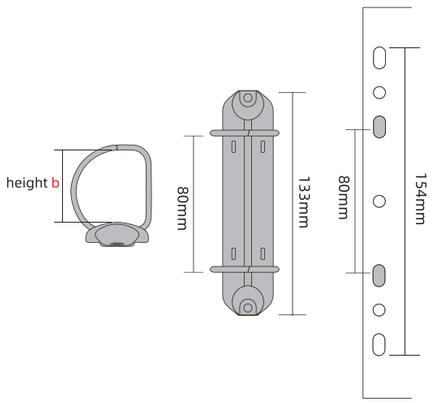

ring spec	height b
133/2D/25	25mm
133/2D/30	30mm
133/2D/38	38mm

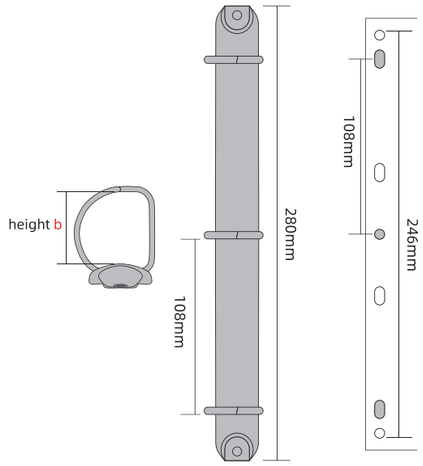

ring spec	height b
280/3D/20	20mm
280/3D/30	30mm

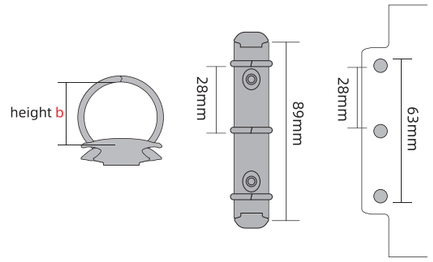

ring spec	height b
89/3O/20	20mm

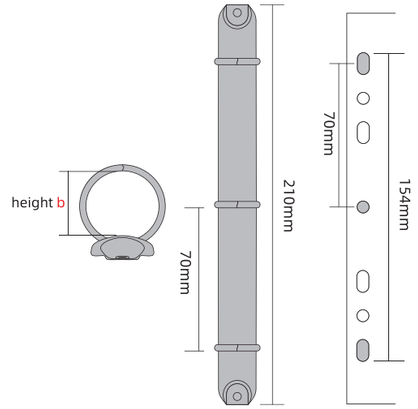

ring spec	height b
210/3O/20	20mm
210/3O/25	25mm
210/3O/30	30mm

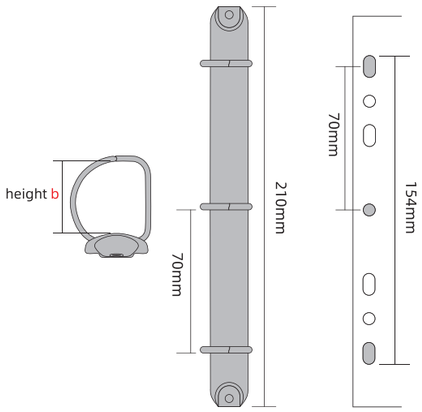

ring spec	height b
210/3D/25	25mm
210/3D/30	30mm

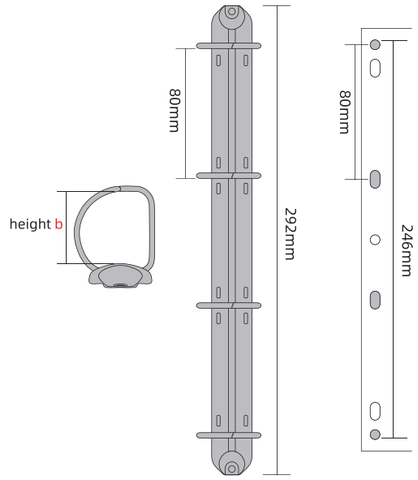

ring spec	height b
292/4D/25	25mm
292/4D/30	30mm
292/4D/38	38mm

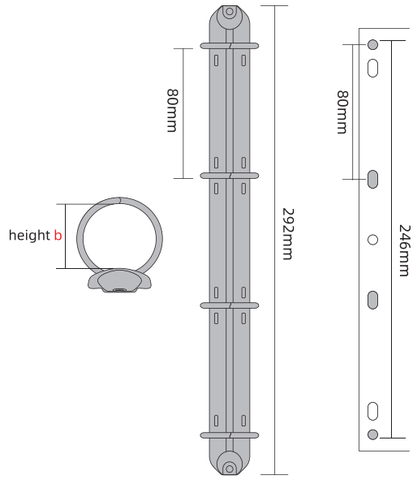

ring spec	height b
292/4O/25	25mm
292/4O/30	30mm
292/4O/38	38mm

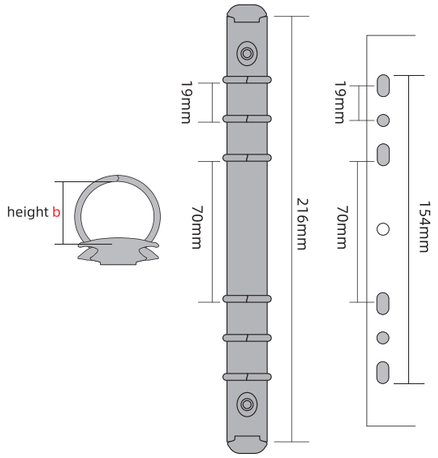

ring spec	height b
216/6O/20	20mm
216/6O/25	25mm

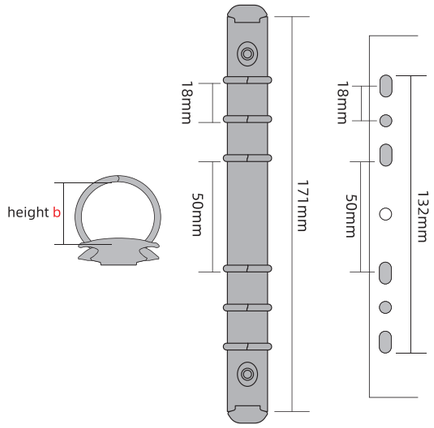

ring spec	height b
177/60/20	20mm